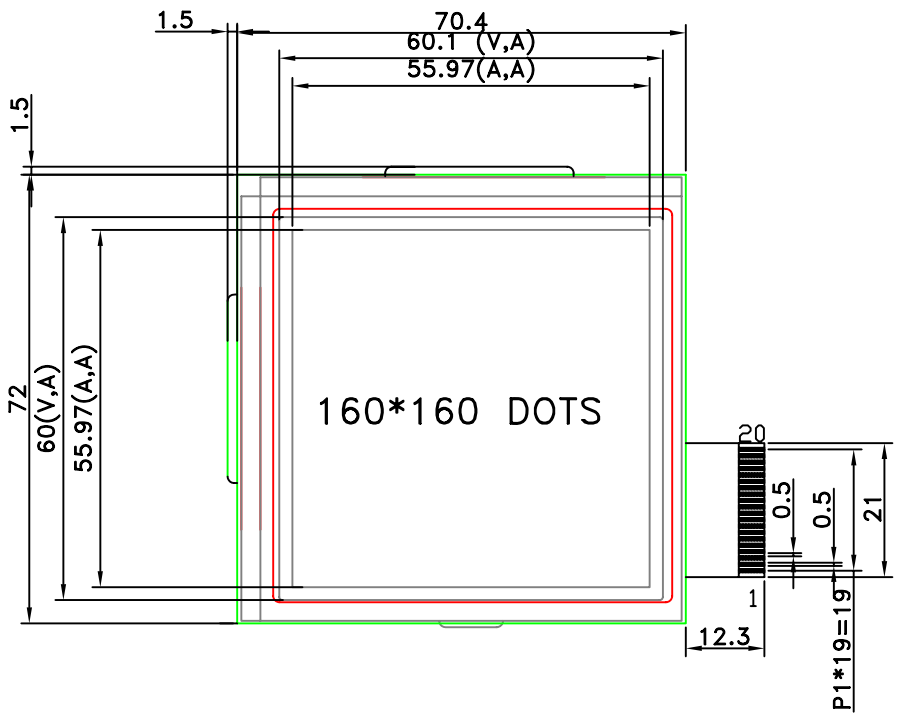

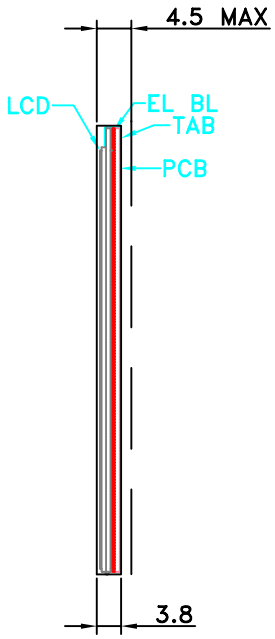

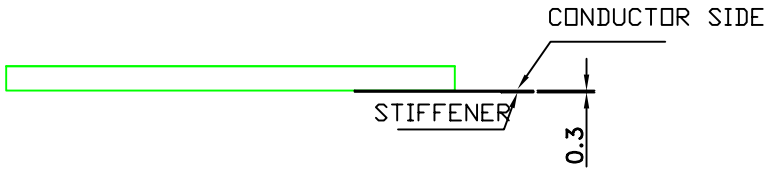

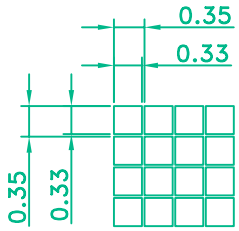

DOTS SCALE:20/1

NOTES:
1.DISPLAY TYPE: FSTN
2.VIEWING ANGLE: 6:00
3.POLARIZER MODE:TRANSFLECTIVE/POSITIVE
4.OPERATING TEMP: −20°C ~ +70°C
5.STORAGE TEMP: −30°C ~ +80°C
6.LOGIC VOLTAGE: VDD=3.3V
7.LCD DRIVER VOLTAGE: Vop=19.0V
8.DRIVE METHOD: 1/160DUTY 1/15BIAS
9.DRIVE IC:S6B0794(OR LH1560)
10.BACKLIGHT TYPE: WHITE EL

PIN ASSIGNMENT

PIN NO.	1	2	3	4	5	6	7	8	9	10	11	12
SIGNAL	EL	EL	VSS	FLM	LP	HSCP	DISP	VDD	VSS	VO	D0	D1
PIN NO.	13	14	15	16	17	18	19	20				
SIGNAL	D2	D3	VSS	VSS	XL	XR	YR	YL				

深 圳 市 耀 宇 科 技 有 限 公 司
SHENZHEN YAO YU TECHNOLOGY CO., LTD

REV.	DESCRIPTION	DATE

DRAW NO.	YMFT-G160160A-4DPEWD			DRAWN	ME CHECKED	EE CHECKED	APPROVED
UNIT:mm	PAGE:1/1	VER: A	SCALE:1/1				
	TOLERANCES UNLESS:±0.2						