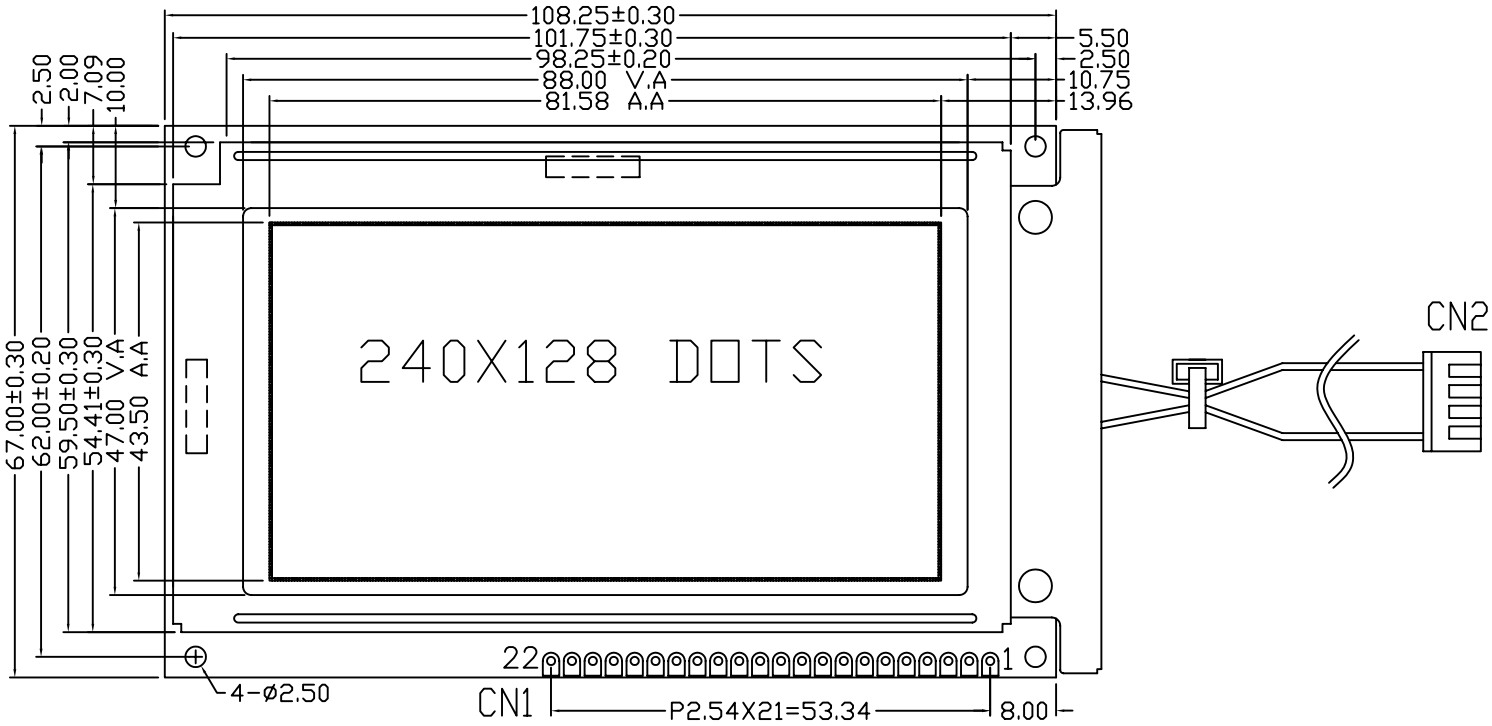

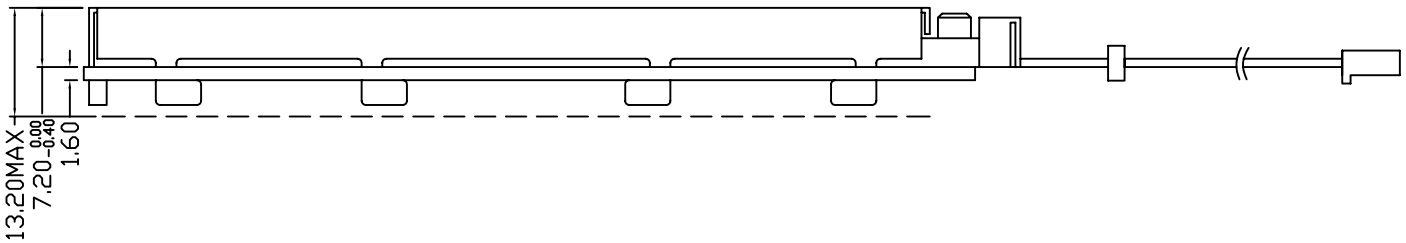

CN1

1	FG	12	DB1
2	VSS	13	DB2
3	VDD	14	DB3
4	V0	15	DB4
5	/WR	16	DB5
6	/RD	17	DB6
7	/CE	18	DB7
8	C/D	19	FS
9	NC	20	VOUT
10	/REST	21	NC
11	DB0	22	NC

CN2

1	VF1	2~3	NC	4	VF2

NOTES:

1.DISPLAY TYPE: STN/BLUE
2.VIEWING DIRECTION: 6:00
3.POLARIZER MODE: TRANSMISSIVE/NEGATIVE
4.OPERATING TEMP: -20°C--+70°C
5.STORAGE TEMP: -30°C--+80°C
6.VDD: +5.0V
7.LCD OPERATING VOLTAGE: 18.5V
8.DRIVE METHOD: 1/128 DUTY 1/12BIAS
9.DRIVE: T6963C
10.BACKLIGHT TYPE:CCFL(WHITE)
11.IC PACKING: COG
12.ALL UNMARKED TOLERANCES: ±0.30mm

深圳市耀宇科技有限公司 SHENZHENG YAOYU TECHNOLOGY CO.LTD		
绘图:	绘图编号:YMSG-G240128EDBCWSDG-1	单位:mm
审核:	客户编号:YMSG-G240128EDBCWSD	日期:
批准:	图纸版号:G-1	页数: