REV	EC NUMBER	DESCRIPTION	DATE
1	XXXXXXX	XXXXXXXX	xxxx/xx/xx

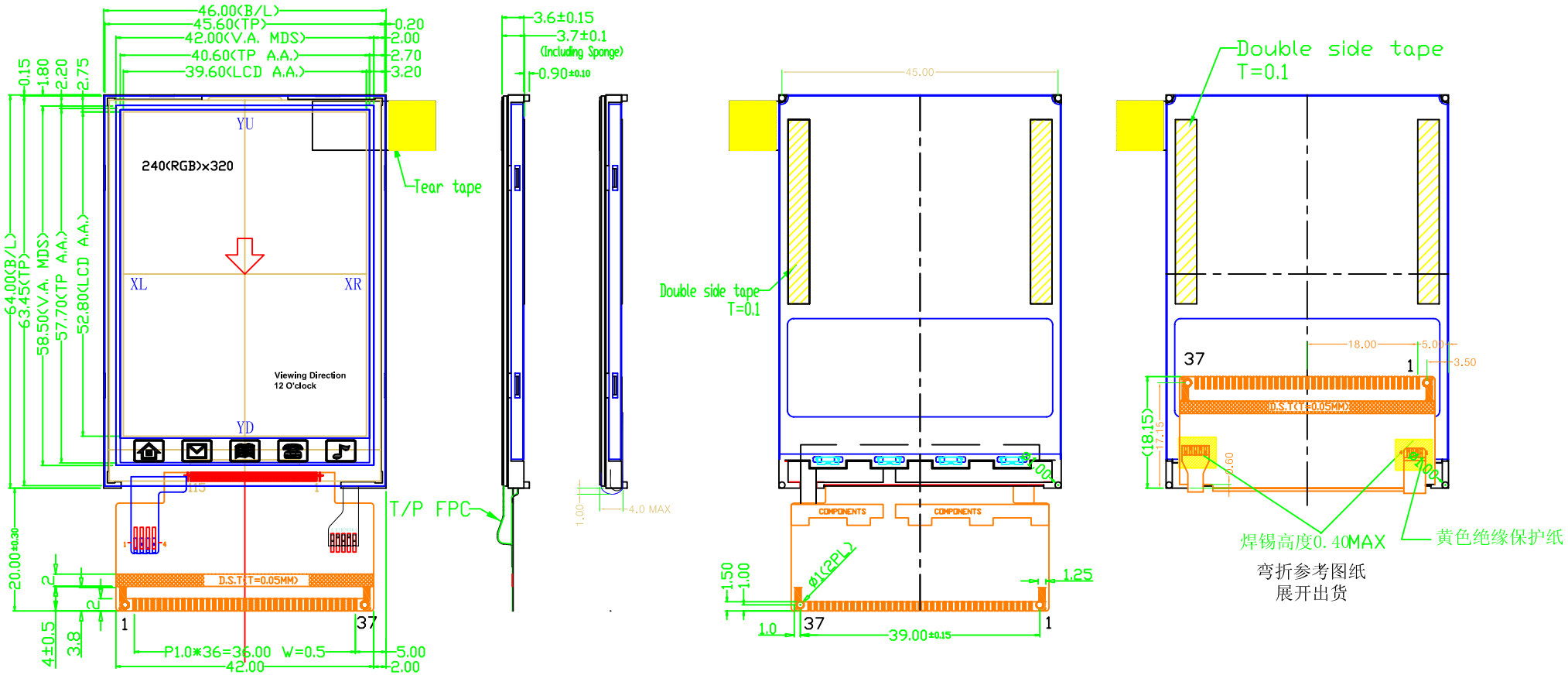

NO.	Pin Name
1	DB0
2	DB1
3	DB2
4	DB3
5	GND
6	VCC
7	/CS
8	RS
9	/WR
10	/RD
11	ID (NC)
12	X(R)
13	Y(D)
14	X(L)
15	Y(U)
16	LEDA
17	LEDK1
18	LEDK2
19	LEDK3
20	LEDK4
21	NC
22	DB4
23	DB8
24	DB9
25	DB10
26	DB11
27	DB12
28	DB13
29	DB14
30	DB15
31	/REST
32	VCI
33	IOVCC
34	GND
35	DB5
36	DB6
37	DB7

NOTES

1. DRIVE IC : ILI9325
2. TYPE : TFT
3. DISPLAY MODE : T/M
4. VIEWING DIRECTION :12 O'CLOCK
5. Backlight: 4 Chip parallel
6. ACCORD WITH ROHS INJUNCTION
7. 建议外壳可视区域比VAmds单边小0.3mm以上,
8. OPERATING TEMP: -10°C~60°C
9. STORAGE TEMP : -20°C~70°C

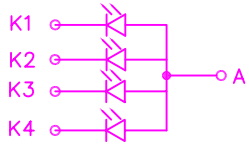

BLU CIRCUIT DIAGRAM

深 圳 市 耀 宇 科 技 有 限 公 司
SHENZHEN YAO YU TECHNOLOGY CO., LTD

DRAW NO.	YM260T-001CT		DRAWN	ME CHECKED	EE CHECKED	APPROVED
UNIT:mm	PAGE:1/1	VER: A	SCALE:1/1			
	TOLERANCES UNLESS:±0.2					